IMO Ultra Slim 5 amp Power Relay ET1

- Ultra Slim 5mm Thickness
- 5 amp SPNO Contact
- Fully Sealed for Immersion Cleaning
- High Sensitivity Coil 120mW
- 3000V Isolation
- Conforms to EN61010 (IEC1010)
- SIL Pitch Terminals
- UL and CSA Approved
- Reinforced Insulation
- Overvoltage category II
- Working voltage: 300V
- Clearance and Creepage distance: > 3mm
- Material Group I (CTI > 600)
- Test Voltage: 5080 V (peak impulse)

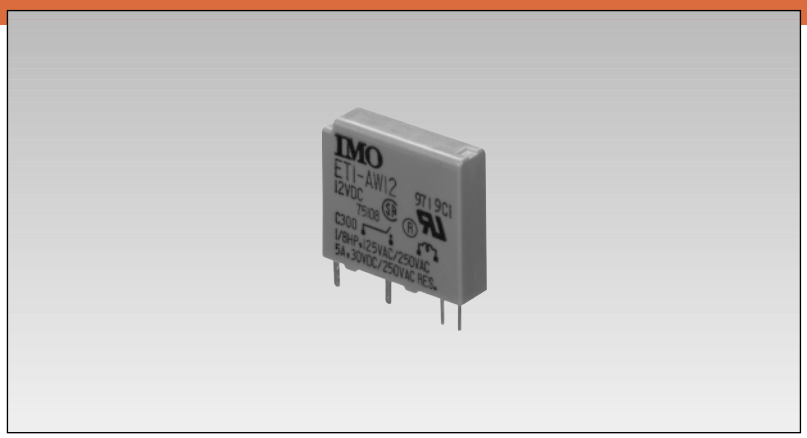

Part Numbers

Ordering Code	Coil Nominal Voltage VDC	Coil Resistance Ω ±10% (at 20˚C)	Must Operate Voltage VDC (at 20˚C)	Must Release Voltage VDC (at 20˚C)
ET1-AW5	5	208	3.35	0.5
ET1-AW9	9	675	6	0.9
ET1-AW12	12	1,200	8	1.2
ET1-AW24	24	4,800	16.1	2.4

Specifications

Contact form		1 A (SPNO)	
Contact rating	**Maximum switching power**	750VA	90W
	Maximum switching voltage	270VAC	150 VDC
	Maximum switching current	5A	
	Maximum carrying current	5A	
	Minimum load (reference value)	100m VDC 0.1mA	
Initial contact resistance		30 mΩ max. (at 6VDC 1A)	
Contact material		AgNi-alloy, Gold Overlay	
Nominal operating power		120mW at 20˚C	
Operate time (excluding bounce) – at nominal voltage		Approximately 10mS	
Release time (excluding bounce) – at nominal voltage		Approximately 5mS	
Insulation resistance		1000 MΩ at 500 VDC	
Breakdown voltage	**Between open contacts**	750 VAC (for 1 minute)	
	Between coil and contacts	3000 VAC (for 1 minute)	
	Surge strength	5080V (1.2 x 50µS standard surge wave)	
Shock resistance – 11mS ½ sine		10 G (misoperating) 100 G (endurance)	
Vibration resistance		10-55Hz 1.5mm pk-pk (misoperation) 4.5mm (endurance)	
Ambient temperature – at nominal coil voltage		-40˚C to + 85˚C	
Life expectancy	**Mechanical**	2 x 10^7 operations	
	Electrical	3 x 10^4 operations @ 5A 250 VAC / 1 x 10^5 operation at 5A 30VDC	
Weight		Approximately 3.5 grams	

Outline dimensions mm

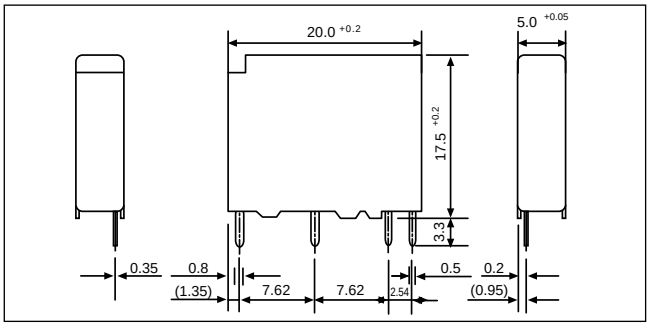
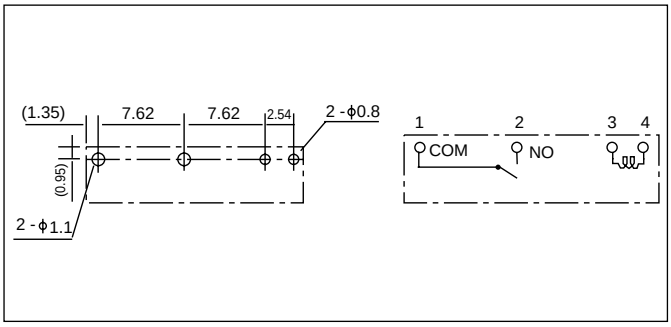
PCB layout and schematics